LMRC-100108

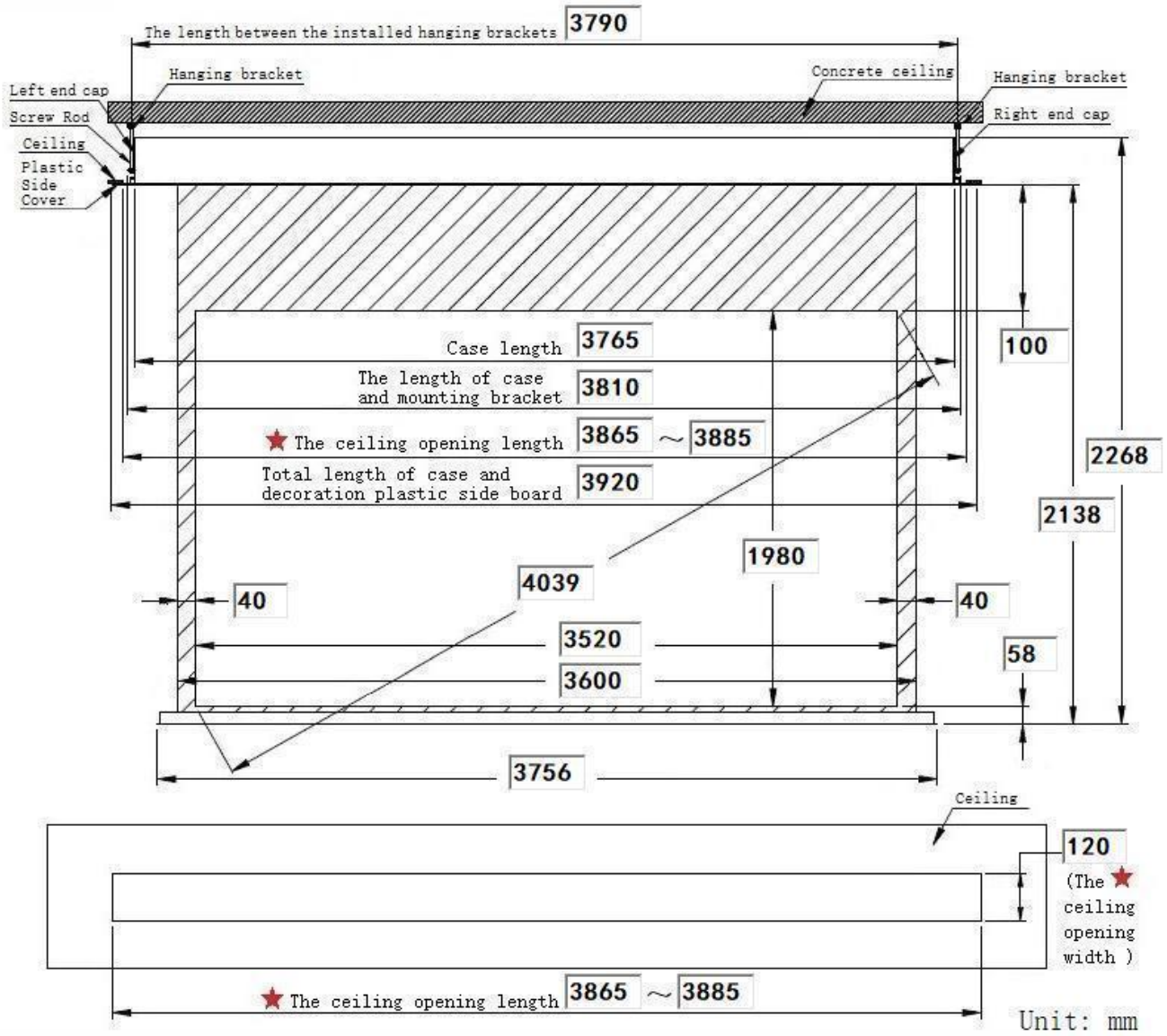

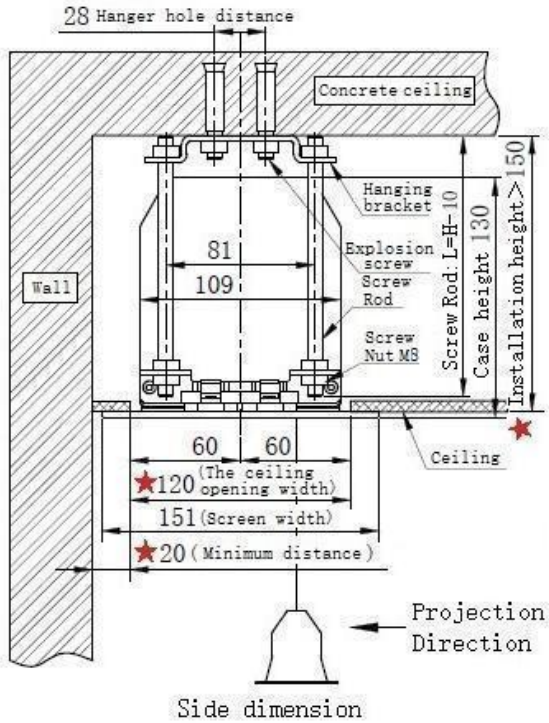

Side dimension

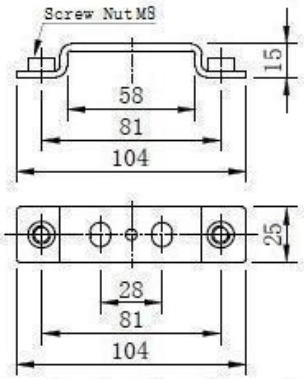

Hanging bracket dimension